World Journal of Engineering Research and Technology

www.wjert.org

Impact Factor: 8.067 Coden USA: WJERA4

DESIGN AND DEVELOPMENT OF AN ARDUINO-BASED SYSTEM FOR MEASURING SOIL NUTRIENT

Ilo S. F.[1], Nwali U. E.[2*]

[1]Department of Computer Engineering, Michael Okpara University of Agriculture, Umudike, Abia State, Nigeria.

[2]Department of Computer Engineering, Michael Okpara University of Agriculture, Umudike, Abia State, Nigeria.

Article Received on 04/03/2026 Article Revised on 25/03/2026 Article Accepted on 01/04/2026

***Corresponding Author**

Nwali U. E.

Department of Computer Engineering, Michael Okpara University of Agriculture, Umudike, Abia State, Nigeria.

https://doi.org/10.5281/zenodo.19337289

How to cite this Article: Ilo S. F.[1], Nwali U. E.[2]* (2026). Design And Development Of An Arduino-Based System For Measuring Soil Nutrient. World Journal of Engineering Research and Technology, 12(4), 01–13.

This work is licensed under Creative Commons Attribution 4.0 International license.

ABSTRACT

This project focuses on the development of a low-cost, Arduino-based soil nutrient monitoring system designed to measure essential soil nutrients nitrogen (N), phosphorus (P), and potassium (K) in real-time. Traditional soil testing methods are often costly, time-consuming, and inaccessible to smallholder farmers, leading to inefficient fertilizer use and soil degradation. To address these challenges, this system integrates an NPK sensor with an Arduino microcontroller to provide accurate, on-the-spot soil nutrient analysis. The system processes sensor data and displays results on an LCD screen or through a mobile application, enabling farmers to make informed decisions about fertilizer application. By offering a portable, affordable, and user-friendly solution, this project aims to optimize nutrient management, enhance crop yields, and promote sustainable agricultural practices. The system's modular design allows for future enhancements, such as integrating additional sensors for pH, moisture, and temperature, further improving its utility in precision agriculture.

KEYWORDS: Arduino, Soil Nutrients, NPK Sensor, Precision Agriculture, Real-time Monitoring, Sustainable Farming, Fertilizer Management, Crop Yield Optimization.

I. INTRODUCTION

Soil fertility is a key factor in agricultural productivity, with essential nutrients such as nitrogen (N), phosphorus (P), and potassium (K) playing critical roles in crop growth. However, many farmers rely on guesswork when applying fertilizers, often leading to poor yields, soil degradation, and environmental harm. Traditional laboratory methods for soil testing, though accurate, are expensive, time-consuming, and largely inaccessible to smallholder farmers who form the majority of the agricultural workforce in developing regions. Advances in microcontrollers and sensor technology now make it possible to design affordable and portable systems for real-time soil monitoring. Arduino-based platforms, in particular, provide a cost-effective and user-friendly solution for precision agriculture. By integrating soil nutrient sensors with an Arduino microcontroller, farmers can directly measure NPK levels in the field and make informed decisions on fertilizer use.

This project presents the design and development of an Arduino-based soil nutrient monitoring system aimed at addressing the limitations of conventional testing. The system provides real-time results, enabling efficient fertilizer management, improved crop yields, and sustainable agricultural practices.

II. RELATED WORKS

Several studies have been conducted to explore the integration of Arduino-based systems with soil nutrient sensing technologies, highlighting their potential to transform agricultural practices through affordable, real-time monitoring. Mukesh Kumar developed a programmed soil sensor framework for determining the amount of nitrogen, phosphorus, and potassium (NPK) in agricultural fields. The system employs an Arduino Nano microcontroller and a Modbus module, with results displayed on an OLED screen. The framework is designed to be both sensitive and reliable, enabling effective long-term soil nutrient monitoring. Its primary objective is to provide farmers with a dependable tool for understanding soil health and managing fertilizer use wisely and effectively. Similarly,[6] investigated the use of an NPK sensor integrated with Arduino for real-time soil nutrient monitoring. Their experiments conducted across multiple data points revealed that the sensor measurements were closely aligned with laboratory-tested values, indicating the system's high accuracy and reliability. Beyond accuracy, the study emphasized the system's affordability and reusability, making it particularly useful for smallholder farmers. The Arduino processes sensor signals through custom algorithms, converting raw readings into actionable data displayed on a user interface

or transmitted wirelessly to mobile devices. This setup allows for continuous monitoring, enabling farmers to adjust fertilizer inputs dynamically during critical crop growth stages. The approach not only improves nutrient use efficiency but also reduces waste and environmental risks. However, the research also identified challenges such as the need for periodic recalibration in heterogeneous soils and susceptibility to environmental factors like rainfall and temperature fluctuations.[5] Despite these limitations, the study highlighted the technology's transformative potential, especially in resource-constrained agricultural contexts, while also suggesting future enhancements such as AI-driven predictive models and expanded soil parameter integration. Further work by.[2][8] introduced an electrochemical sensor-based system for continuous nutrient determination. Their system utilizes a flow-through electrochemical setup with a two-electrode configuration, based on flow injection analysis (FIA), to detect soil nutrients. Ion Selective Electrodes (ISE) and Ion Selective Field Effect Transistors (ISFET) were highlighted as the primary potentiometric sensor types. While ISFETs demonstrated potential for real-time monitoring, ISEs were noted to be unsuitable for immediate sensing applications due to their inherent time delays. The study emphasized the importance of electrochemical methods in creating highly sensitive systems, but it also acknowledged the challenges of achieving real-time responsiveness in field applications. Drawing from these studies, the proposed work builds on the integration of Arduino with NPK sensors to provide an accessible, low-cost solution for soil nutrient monitoring. By processing and displaying nutrient data directly in the field[4], this approach aims to overcome the limitations of conventional laboratory testing, which is often time-consuming and expensive. Moreover, the incorporation of mobile applications for data logging and decision support further enhances the practicality of the system, enabling farmers to make informed, timely fertilizer management decisions.[2] While challenges such as calibration and environmental variability remain, prior research demonstrates that Arduino-based soil nutrient sensing represents a promising pathway toward democratizing precision agriculture, improving crop productivity, and ensuring sustainable land use practices.

III. MATERIALS AND METHODS

The proposed system integrates both hardware and software components to facilitate The Arduino-based NPK sensor system for real-time soil nutrient monitoring.

A. HARDWARE COMPONENTS

- Arduino Microcontroller

- Soil NPK Sensor
- LCD Display
- Resistors
- Capacitor
- MAX485 Modbus Module
- 9-12V DC Power Supply
- Connecting Wires

ARDUINO MICROCONTROLLER

The Arduino microcontroller provided several services or functions that contributed to automation, monitoring, of soil nutrient usage. Arduino was interfaced with various sensors to collect data.

Figure 3.4 shows a picture of an Arduino Uno microcontroller

Fig 1: Arduino UNO microcontroller.

SOIL NPK SENSOR

The **soil NPK sensor** is suitable for detecting the content of **nitrogen, phosphorus,** and **potassium** in the soil. It helps in determining the fertility of the soil thereby facilitating the systematic assessment of the soil condition. The sensor can be buried in the soil for a long time. It has a **High-quality probe**, **rust resistance**, **electrolytic resistance**, **salt & alkali corrosion resistance**, to ensure the long-term operation of the probe part. Therefore, it is suitable for all kinds of soil. It is suitable for the **detection** of alkaline soil, acid soil, substrate soil, seedling bed soil & coconut bran soil**.**

Fig 2 Soil NPK Sensor.

LCD DISPLAY

LCD (Liquid Crystal Display) screen is an electronic display module and find a wide range of applications. A 16x2 LCD display is very basic module and is very commonly used in various devices and circuits. These modules are preferred over seven segments and other multi segment LEDs. The reasons being: LCDs are economical; easily programmable; have no limitation of displaying special & even custom characters (unlike in seven segments), animations and so on.

A 16x2 LCD means it can display 16 characters per line and there are 2 such lines. In this LCD each character is displayed in 5x7 pixel matrix. This LCD has two registers, namely, Command and Data.

Fig 3: LCD (Liquid Crystal Display.

MAX485 TTL TO RS-485 INTERFACE MODULE

The **MAX485 TTL to RS-485 Interface Module** allows us to use the RS-485 differential signaling for robust long-distance serial communications up to **1200 meters** or in electrically noisy environments and is commonly used in industrial environments. It supports up to

2.5MBit/Sec data rates, but as distance goes up, the maximum data rate that can be supported comes down.

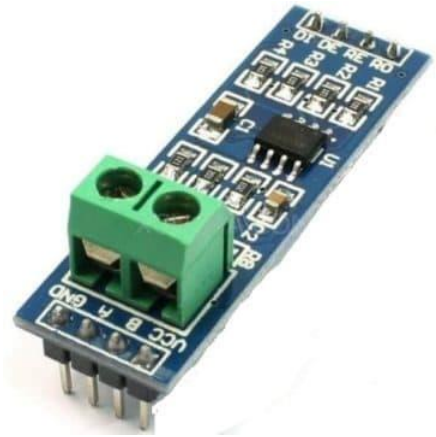

Fig *4: MAX485 Modbus Module.*

The data starts out as a typical **TTL level** serial as far as the microcontroller is concerned while the **RS-485 module** takes care of converting the electrical signals between TTL and the differential signaling used by RS-485. A significant benefit of RS-485 is that it supports multiple devices **(up to 32)** on the same cable, commonly referred to as 'multi-drop'.

IV. METHODS

WATERFALL MODEL: This is linear-sequential life cycle model that was the first process model to be introduced even for software development. It is very simple to understand and use as each phase must be completed before next phase can begin and there is no overlapping in the phases. It is expanded in a linear sequential flow; meaning that any phase in the development process begins only if the previous phase is completed. In waterfall model phases do not overlap.

BLOCK DIAGRAM OF THE SYSTEM

The block diagram shows how the different system modules are connected starting from the power module which provide stable 5volts Dc power for powering all the components of the system. The lower part of the block diagram show the flow of data from the Bluetooth module to the microcontroller which converts this speech signal to text and then sends it to the liquid crystal display LCD.

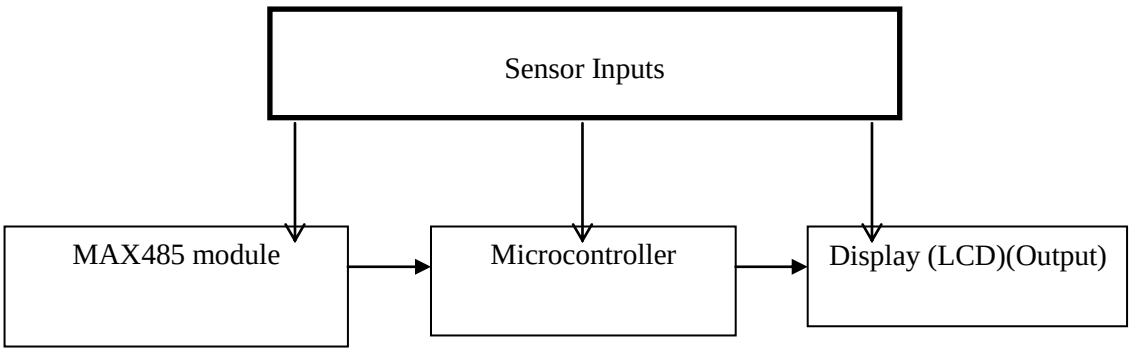

Fig 5: Block Diagram of the System.

CIRCUIT DIAGRAM OF THE SYSTEM

The circuit diagram shows a diagrammatic explanation of how the components used in this project work were connected.

The system circuit diagram shows the connection of the Bluetooth module which is the main receiver module of the system to the microcontroller which is the main processing unit through the TX and RX pin and the connection of the LCD which is the main output unit of the system. Figure 3.11 below shows the circuit diagram of the system.

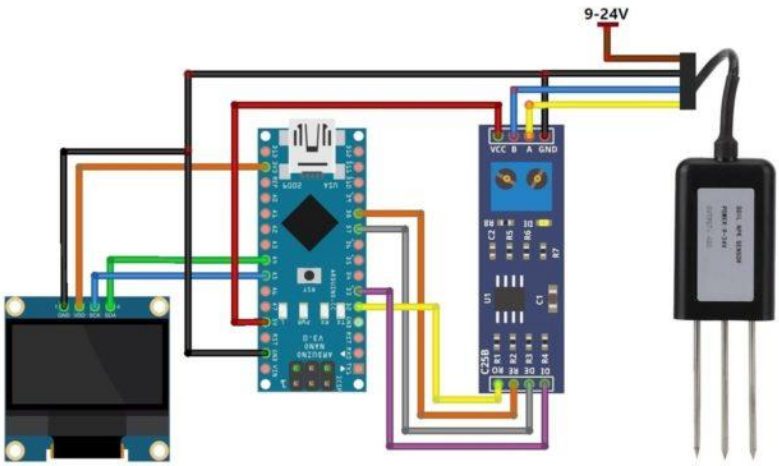

Fig 6: circuit diagram of the system.

***V*. RESULTS AND DISCUSSION**

NPK SENSOR INQUIRY FRAME (Sensor Calibration)

The NPK Sensor had 3 different inquiry frame for reading the value of **Nitrogen (N), Phosphorous (P) & Potassium (K)**. The inquiry frame was provided along with the instruction manual. For the NPK data the following individual inquiry frameworks:

1. Nitrogen: {0x01,0x03, 0x00, 0x1e, 0x00, 0x01, 0xe4, 0x0c}

The **inquiry frame** for getting Soil Nitrogen Value is.

Table 1: Nitrogen inquiry frame.

Address Code	Function Code	Register Start Address	Register Length	CRC_L	CRC_H
0x01	0x03	0x00 0x1e	0x00 0x01	0xE4	0x0C

The following response was gotten

Table 2: Nitrogen inquiry frame response.

Address Code	Function Code	Effective Number of Bytes	Nitrogen Value	CRC_L	CRC_H
0x01	0x03	0x02	0x00 0x20	0xB9	0x9C

To calculate the Soil Nitrogen from the **Response** received. i.e., a response with Soil Nitrogen Value of 0030 will be.

0020 H(hexadecimal) = 32 (Decimal) => Nitrogen = 32mg/kg

2. Phosphorous: {0x01,0x03, 0x00, 0x1f, 0x00, 0x01, 0xb5, 0xcc}

The **inquiry frame** for getting Soil Phosphorous Value is.

Table 3: Phosphorous inquiry frame.

Address Code	Function Code	Register Start Address	Register Length	CRC_L	CRC_H
0x01	0x03	0x00 0x1f	0x00 0x01	0xB5	0xCC

The following response was gotten

Table 4: Phosphorous inquiry frame response.

Address Code	Function Code	Effective Number of Bytes	Phosphorus Content	CRC_L	CRC_H
0x01	0x03	0x02	0x00 0x25	0x79	0x9F

To calculate the Soil Phosphorous from the **Response** received. For example, 0030 as a response from Soil Nitrogen Value was.

0025 H(hexadecimal) = 37 (Decimal) => Phosphorous = 37/kg

3. Potassium: ***{0x01,0x03, 0x00, 0x20, 0x00, 0x01, 0x85, 0xc0}***

The **inquiry frame** for getting Soil Potassium Value is:

Table 5: Potassium inquiry frame.

Address Code	Function Code	Register Start Address	Register Length	CRC_L	CRC_H
0x01	0x03	0x00 0x20	0x00 0x01	0x85	0xC0

The following response was gotten

Table 6: Potassium inquiry frame response.

Address Code	Function Code	Register Start Address	Register Length	CRC_L	CRC_H
0x01	0x03	0x20	0x00 0x03	0xB8	0x50

The sensor Calibration began with the approach of using some soil samples to map raw sensor outputs to meaningful N–P–K units. a small small set of known soil in a plastic container was user and the probe was inserted multiple times, recording the raw bytes returned over RS-485 and the averaged display values.

DATA ACQUISITION AND STABILITY

When the Arduino talks to the NPK probe it uses an RS-485 cable and sends small command messages. The probe replies with data that the Arduino reads and turns into numbers. This communication works fine most of the time, but problems happen if the transceiver isn't given enough time to switch between sending and receiving or if the cables/connections are loose that can cause occasional lost messages.

We found the probe needs a short **warm-up** after you put it in the soil. Usually 30–60 seconds is enough for the reading to settle. While it's warming up, the numbers jump around a lot; after the warm-up they settle near a steady value with only small quick fluctuations.

To make the display useful, the firmware waits during the warm-up and then uses a simple **rolling average** (it averages several recent readings) so the value shown on the OLED and in the serial log looks stable and trustworthy. Also, wetter soils give stable readings faster than very dry, loose soils because they make better electrical contact with the probe.

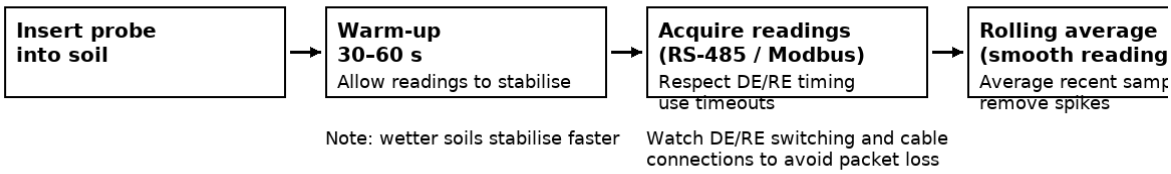

Fig 7: Acquisition Flowchart.

***RESULT* DISPLAY AND STORAGE**

The OLED (SSD1306) provided clear, immediate feedback and a simple user interface for field testing. We added a short start-up animation and then show a stable reading on the screen; the Arduino also writes the same values to the serial port so they can be saved on a laptop. For this prototype we stored data by copying serial output, but the code is modular so adding an SD card or CSV logger would be straightforward. When the firmware waits briefly after inserting the probe and averages several readings, the numbers on the screen become steady and easy to read. Small, realistic fluctuations around the average make the display feel live without seeming noisy, improving user confidence. For larger deployments, it would be better to save readings with timestamps into a lightweight database or CSV file for later analysis.

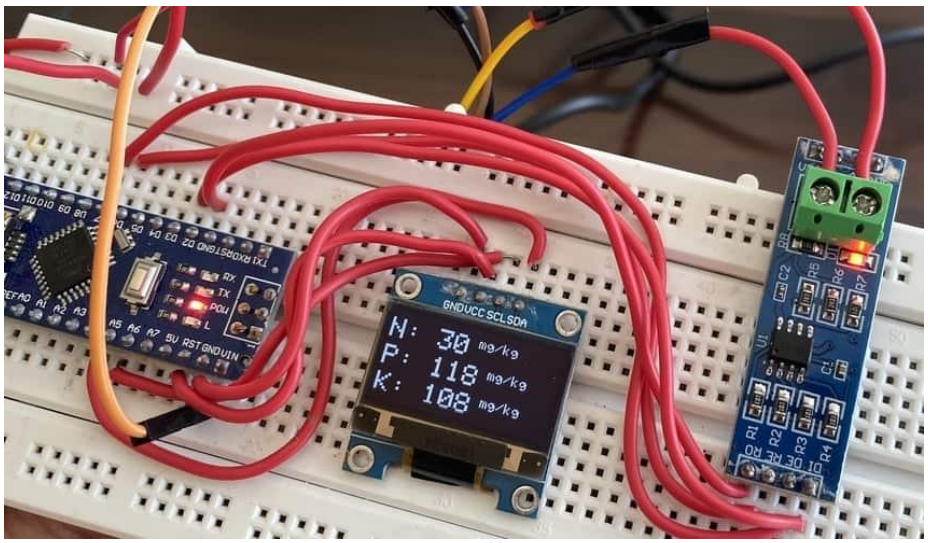

Fig 8: result display on.

The prototype demonstrated that an Arduino-based controller can reliably interface with an NPK probe via RS-485, filter noisy data, and display stable values on an OLED. While effective for screening and trend detection, the system is not yet suitable for lab-grade precision. The probe requires a short warm-up (30–60 s), during which readings fluctuate before stabilizing; this was mitigated through a warm-up delay and rolling average in firmware. Limitations include the probe's 8-bit output (0–255 range), occasional RS-485 packet loss, and sensitivity to soil conditions such as moisture, temperature, and insertion depth. These factors restrict the device to comparative and monitoring use until further calibration and firmware improvements are made.

DEVICE ASSEMBLY

The Arduino, RS-485 transceiver, and OLED were first tested on a breadboard, then enclosed in a compact project box for protection and portability. The transceiver was wired for transmit/receive control, and the NPK sensor probe connected via twisted-pair cable with termination for reliable communication. The OLED was interfaced over I²C and powered with a stable 5–12 V supply. A probe holder ensured consistent insertion depth, and neat wiring minimized interference. Testing included power checks, OLED verification, RS-485 loopback, and probe calibration with a reference solution. Soil tests followed a consistent procedure: warm-up → insert → read → rinse.

Fig 9: final device assembly.

V. CONSLUSION

This project successfully produced a working, low-cost prototype for measuring soil nutrients (NPK) in the field. The system can collect nutrient readings, smooth out the data, and present it to the user almost instantly through the OLED display. It also sends the readings over the serial port for storage or further analysis.

From my testing, the device works well as a quick screening tool to compare nutrient levels across different soil samples and to observe general trends. The combination of a simple display and serial logging made it easy to use both in the lab and outdoors.

However, I also observed some limitations. The current reading method only uses 8-bit values, so the measurement range is smaller than what the sensor can actually provide. The readings can also be affected by environmental factors such as soil moisture, temperature, and

the way the probe is inserted. Occasionally, there were communication errors between the Arduino and the sensor over the RS-485 link.

Overall, the system meets the basic goal of providing near real-time soil nutrient measurements, but it could be made much more accurate and reliable with a few firmware, hardware, and operational improvements.

REFERENCES

1. Adamchuk, V. I., Hummel, J. W., Morgan, M. T., & Upadhyaya, S. K. (2001). On-the-go soil sensors for precision agriculture. *Computers and Electronics in Agriculture*, 31(1): 47–55. https://doi.org/10.1016/S0168-1699(00)00184-2
2. Brett, C. M. A., and A. M. Oliveira Brett. (1993). *Electrochemistry, Principles, Methods and Applications*. Chap. 10, Oxford University Press, Oxford.
3. Chang, C. W., Laird, D. A., Mausbach, M. J., & Hurburgh, C. R. (2001). Near-infrared reflectance spectroscopy–principal components regression analyses of soil properties. *Soil Science Society of America Journal*, 65(2): 480–490. https://doi.org/10.2136/sssaj2001.652480x
4. Choudhari, C. S., & Shaligram, A. D. (2002). Soil macronutrient sensing for precision agriculture using real-time systems. *International Journal of Agricultural Engineering*, 9(2): 33–38.
5. Grift, T. E., Kweon, G., & Ting, K. C. (2002). Acoustic detection of soil compaction. *Transactions of the ASAE*, 45(4): 1031–1035. https://doi.org/10.13031/2013.9950
6. Dagar, R., Som, S., & Kaur, P. (2018). Smart farming – IoT based smart sensors agriculture stick for live temperature and moisture monitoring using Arduino, cloud computing & solar technology. *Proceedings of the 2018 International Conference on Intelligent Computing and Control Systems (ICICCS)*, 1–5. IEEE. https://doi.org/10.1109/ICCONS.2018.8663155
7. Kumar, R., Singh, S., & Kumar, P. (2021). IoT-based soil moisture monitoring using Arduino and GSM module. *Materials Today: Proceedings*, 46: 10432–10436. https://doi.org/10.1016/j.matpr.2021.02.513
8. Raju, S., et al. (2020). "Arduino-Based NPK Detection System." *International Journal of Engineering Research*.

9. Raju, P. V., Shashank, V., & Kumar, M. (2020). Arduino based soil nutrient detection and monitoring system. *International Journal of Innovative Technology and Exploring Engineering*, 9(3): 200–204. https://doi.org/10.35940/ijitee.C7804.019320.