wjert, 2019, Vol. 5, Issue 6, 88-106. *Original Article* ISSN 2454-695X

World Journal of Engineering Research and Technology
WJERT
www.wjert.org SJIF Impact Factor: 5.924

# THE EFFECT OF INTERNAL TEMPERATURE LOADS ON ORIFICE FLOWMETER

**Liang-Huai Tong[1], Su-Lu Zheng[1*], Jian Fan[2], Xiu-Qin Chen[4], Hao-Nan Xu[2], Jiang-Bo Tong[2]**

[1]Quzhou Special Equipment Inspection Center, Quzhou 324000, China.
[2]College of Mechanical Engineering & Key Laboratory of Air-driven Equipment Technology of Zhejiang Province, Quzhou University, Quzhou, 324000, China.

**Article Received on 04/09/2019** **Article Revised on 25/09/2019** **Article Accepted on 15/10/2019**

***Corresponding Author**
**Su-Lu Zheng**
Quzhou Special Equipment Inspection Center, Quzhou 324000, China.

## ABSTRACT

Orifice flowmeter has a wide range of applications, it can be applied to all single-phase fluids (liquid, gas, steam) and part of miscible flow, the diameter and working state (temperature and pressure) of general production process can be measured. In order to study the influence of different temperature loads on the accuracy of the orifice flowmeter under certain pressure load on the inner wall of the orifice flowmeter pipeline, the three-dimensional model of the orifice flowmeter is analyzed by using simulation software, and the ability of the orifice flowmeter to withstand loads under natural conditions is analyzed. It is found that the locations of the maximum stress and displacement of orifice flowmeter occur at the inner wall of pipeline and inlet, and the maximum strain occurs in the shell. The maximum stress, displacement and strain of the orifice flowmeter increase with the increase of the temperature load when the pressure load is 0.1 MPa and keeps constant.

**KEY WORDS:** Orifice flowmeter; Finite element; Load; Maximum stress.

## 0 INTRODUCTION

Orifice flowmeter is a high range ratio differential pressure flowmeter consisting of standard orifice plate and multi-parameter differential pressure transmitter, which can measure gas, steam, liquid and so on. It has a series of advantages, such as simple structure, stable

performance and wide application range, so it is widely used in the control process and measurement of petroleum, chemical industry, metallurgy, electric power, heating, water supply and other fields[1~2]. Orifice flowmeter is widely used in many fields, it can measure all unidirectional flow velocity and part of miscible flow velocity[3], when measuring, the fluid flows through the throttle device in the pipeline, causing local contraction near the throttle, increasing flow velocity and generating static pressure difference on both sides of the upstream and downstream. The greater the flow of medium, the greater the pressure difference before and after the throttle[4~6], so orifice flowmeter can measure the flow rate by measuring the pressure difference, but the pressure loss is large, and orifice flowmeter needs to convey hot air, which is easy to cause corrosion to the sensor, making the accuracy difficult to guarantee[7~9]. Based on this, the orifice flowmeter is modeled by Solidworks[10], and the three-dimensional model is analyzed by the Simulation software[11], to analyze the distribution and variation of stress, displacement and strain of the orifice flowmeter under natural conditions, and provide a theoretical basis for further improving the orifice flowmeter.

## 1 Calculation settings

The orifice flowmeter is made of 304 stainless steel, the elastic modulus of 304 stainless steel is 190000 N/mm$^2$, Poisson's ratio is 0.29, and the mass density is 8000 kg/m$^3$, as shown in Tab. 1. Fix the middle two plates of the orifice flowmeter with definition fixture, so that the orifice flowmeter cannot move in all directions, as shown in Fig. 1.

The force surface of the built 3D model is loaded to simulate the pressure and temperature that it loaded in reality.

In this study, it is necessary to apply pressure load and temperature load on the inner wall of the orifice flowmeter for a certain material, and on the premise of constant pressure load, the additional temperature of the inner wall of the pipeline is changed, and the changes of stress, displacement and strain of the orifice flowmeter are compared. Therefore, the pressure load and temperature load are applied to the inner wall of the pipe to simulate the load of orifice flowmeter, as shown in Fig. 2.

**Tab. 1 Attribute of 304 stainless steel materials.**

| Attributes | Parameter | Attributes | Parameter |
|---|---|---|---|
| Medium shear modulus | 75000 N/mm$^2$ | Mass density | 8000 kg/m$^3$ |
| Tensile strength | 517.017 N/mm$^2$ | Yield strength | 206.807 N/mm$^2$ |
| Thermal expansion coefficient | 1.80E-005 /K | Thermal conductivity | 16 W/(m • K) |
| Elastic Modulus | 190000 N/mm$^2$ | Medium Poisson's ratio | 0.29 |

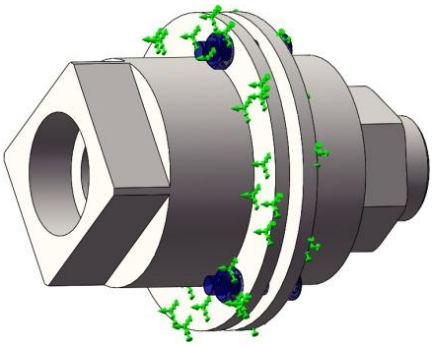

**Fig. 1: Diagram of fixed middle plate of the orifice flowmeter.**

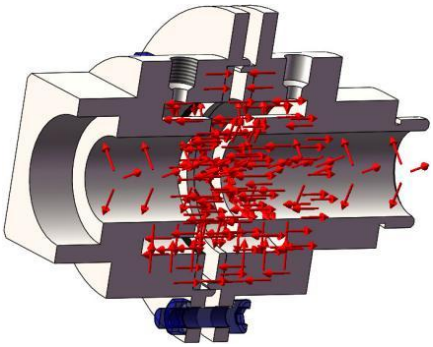

**(a) Diagram of pressure load**

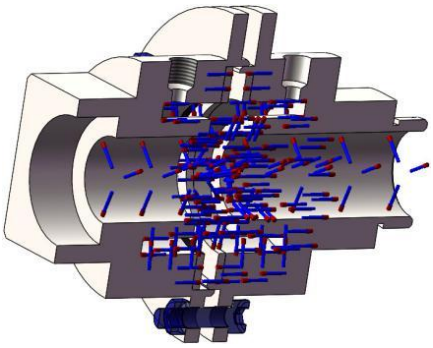

**(b) Diagram of temperature load**

**Fig. 2 Diagram of load of inner wall of the orifice flowmeter pipeline.**

Grid generation in Solidworks Simulation is an important part of finite element analysis. The results of analysis of the orifice flowmeter can also be more accurate by choosing appropriate grid. Based on this, the three-dimensional model is analyzed under the condition of different grid numbers, the selected pressure surface is shown in Fig. 3, and the appropriate grid is obtained, as shown in Fig. 4.

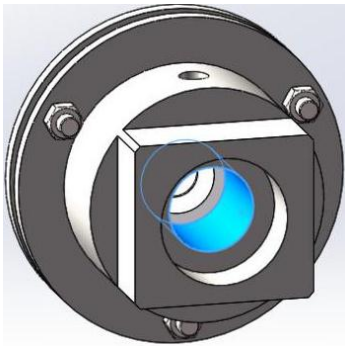

**Fig. 3 Pressure surface.**

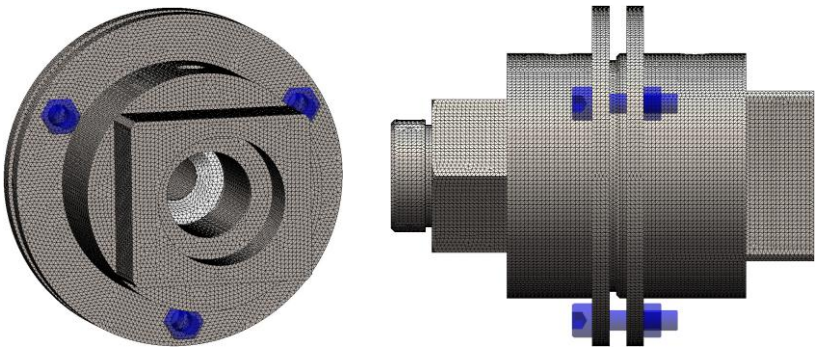

**(a) Main view** **(b) Left view**

**Fig. 4 Grid of the orifice flowmeter.**

## 2 RESULTS ANALYSIS

### Stress analysis

Firstly, the temperature load of 20 ℃ and the pressure load of 0.1 MPa was applied to the inner wall of the orifice flowmeter pipe, the results are shown in Fig. 5.

Fig. 5 (a) is the main view of stress of the orifice flowmeter at 20 ℃ and 0.1 MPa and its detailed data; Fig. 5 (b) is the top view of stress of the orifice flowmeter at 20 ℃ and 0.1 MPa and its detailed data; Fig. 5 (c) is the left view of stress of the orifice flowmeter at 20 ℃ and 0.1 MPa and its detailed data; Fig. 5 (d) is the cutaway view of stress of the orifice flowmeter at 20 ℃ and 0.1 MPa and its detailed data.

Fig. 5 (a) and Fig. 5 (d) show that the stress of the orifice flowmeter is concentrated at the middle groove of the inner wall of the pipeline, the stress of the orifice flowmeter reaches its maximum value at the middle groove of the inner wall of the pipe, which is 24.53526 MPa, and reaches its minimum at the outlet of the orifice flowmeter, which is 0.0001106186 MPa. Fig. 5 (a) shows that the maximum stress at the outlet of the orifice flowmeter is 2.044707MPa and the minimum stress at the outlet of the orifice flowmeter is 0.0001106186MPa; Fig. 5 (b) and Fig. 5 (c) show that the maximum stress of the orifice flowmeter at its inlet is 6.133899MPa and the minimum stress of the orifice flowmeter at its inlet is 2.044707MPa; Fig.5 (d) shows that the maximum stress of pipe inner wall of the orifice flowmeter is 24.53526 MPa and the minimum stress of pipe inner wall of the orifice flowmeter is 10.22309 MPa.

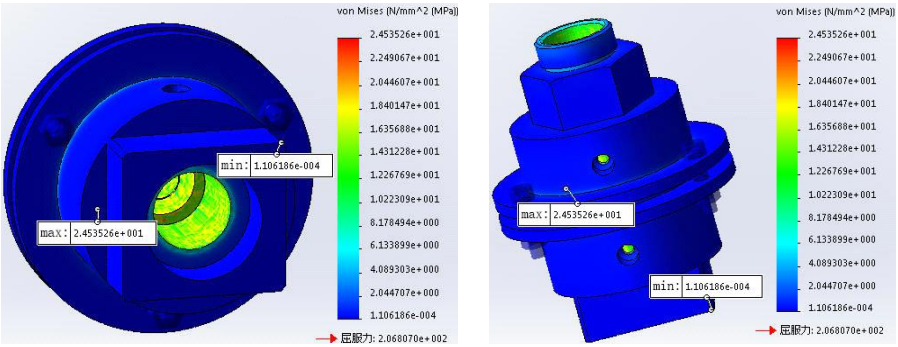


**(a) Main view** **(b) Top view**

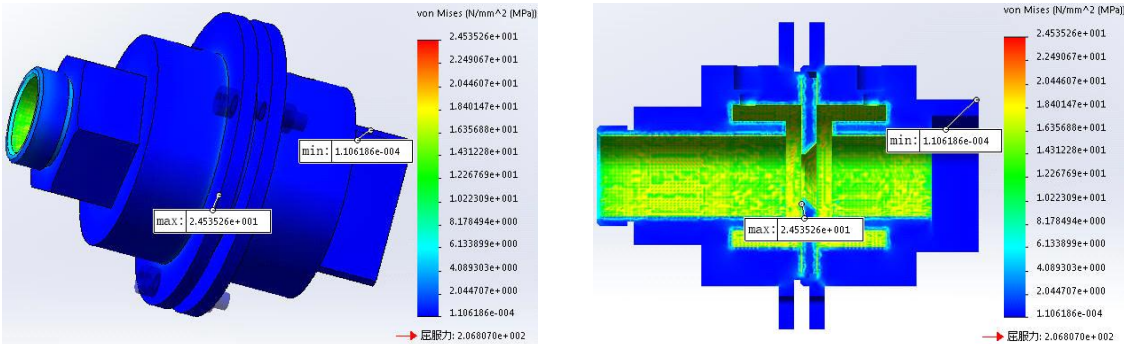


**(c) Left view** **(d) Cutaway view**

**Fig.5 Stress diagram (20 ℃, 0.1 MPa).**

Keep the pressure load applied on the orifice flowmeter unchanged, and increase the temperature load from 20 ℃ to 100 ℃, as shown in Fig. 6.

Fig. 6 (a) is the main view of stress of the orifice flowmeter at 100 ℃ and 0.1 MPa and its detailed data; Fig. 6 (b) is the top view of stress of the orifice flowmeter at 100 ℃ and 0.1

MPa and its detailed data; Fig. 6 (c) is the left view of stress of the orifice flowmeter at 100 ℃ and 0.1 MPa and its detailed data; Fig. 6 (d) is the cutaway view of stress of the orifice flowmeter at 100 ℃ and 0.1 MPa and its detailed data.

With the change of the orifice flowmeter when the temperature load is 20 ℃ and the pressure load is 0.1 MPa, it can be seen that the stress is still concentrated at the middle groove of the inner wall of the pipe. Fig. 6 (a) and Fig. 6 (d) show that the maximum stress of the orifice flowmeter is obtained at the middle groove of the orifice flowmeter, which is 377.5091 MPa, it is 352.97384 MPa larger than that of the orifice flowmeter when the temperature load is 20 ℃ and the pressure load is 0.1 MPa, the minimum stress of the orifice flowmeter is obtained at the outlet of orifice flowmeter, which is 0.004036669 MPa, it is 0.0039260504 MPa larger than that of the orifice flowmeter when the temperature load is 20 ℃ and the pressure load is 0.1 MPa. Fig. 6 (a) shows that the maximum stress at the outlet of the orifice flowmeter is 31.46279 MPa and the minimum stress at the outlet of the orifice flowmeter is 0.004036669 MPa; Fig. 6 (b) and Fig. 6 (c) show that the maximum stress at the inlet of the orifice flowmeter is 94.38030 MPa and the minimum stress at the inlet of the orifice flowmeter is 0.004036669 MPa; Fig. 6 (d) shows that the maximum stress of the orifice flowmeter pipe wall is 377.5091 MPa and the minimum stress of the orifice flowmeter pipe wall is 157.2978 MPa. It can be seen that the location of the minimum stress of the orifice flowmeter is basically unchanged when the pressure load is 0.1 MPa and the temperature load is increased from 20 ℃ to 100 ℃,the value increases by 0.0039260504 MPa, and the location of the maximum value is basically unchanged, but the value changes greatly, which increases by 352.97384 MPa.

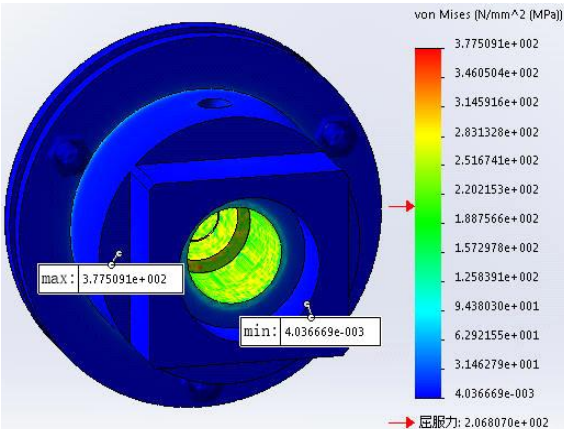


**(a) Main view**

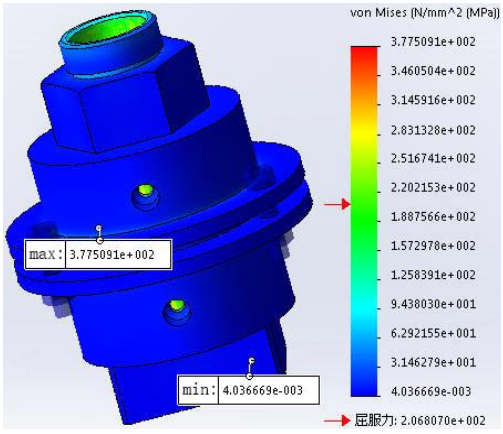


**(b) Top view**

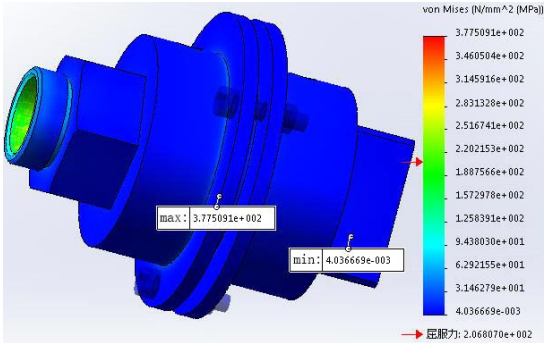


**(c) Left view**

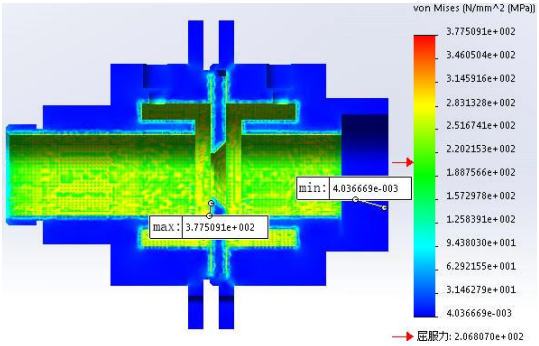


**(d) Cutaway view**

**Fig.6 Stress diagram (100 ℃, 0.1 MPa).**

Continue to keep the pressure load applied on the inner wall of the orifice flowmeter pipeline unchanged, and increase the temperature load from 100 ℃ to 500 ℃, as shown in Fig. 7.

Fig. 7 (a) is the main view of stress of the orifice flowmeter at 500 ℃ and 0.1 MPa and its detailed data; Fig. 7 (b) is the top view of stress of the orifice flowmeter at 500 ℃ and 0.1 MPa and its detailed data; Fig. 7 (c) is the left view of stress of the orifice flowmeter at 500 ℃ and 0.1 MPa and its detailed data; Fig. 7 (d) is the cutaway view of stress of the orifice flowmeter at 500 ℃ and 0.1 MPa and its detailed data.

Comparing the changes, the stress of the orifice flowmeter is still concentrated at the middle groove of the inner wall of the pipe. Fig. 7 (a) and Fig. 7 (d) show that the stress of the orifice flowmeter reaches its maximum value at the two fixed plates on the inner wall of the pipeline, which is 2387.728 MPa, it is 2010.2189 MPa larger than that of the orifice flowmeter when the temperature load is 100 ℃ and the pressure load is 0.1 MPa, the stress of the orifice flowmeter reaches its minimum value at the outlet, which is 0.01990113MPa, it is 0.015864461 MPa larger than that of the orifice flowmeter when the temperature load is 100 ℃ and the pressure load is 0.1 MPa. Fig. 7 (a) shows that the maximum stress at the outlet of the orifice flowmeter is 198.9956 MPa and the minimum stress at the outlet of the orifice flowmeter is 0.01990113 MPa; Fig. 7 (b) and Fig. 7 (c) show that the maximum stress at the inlet of the orifice flowmeter is 596.9469 MPa and the minimum stress at the inlet of the orifice flowmeter is 198.9956 MPa; Fig. 7 (d) shows that the maximum stress of the orifice flowmeter pipe wall is 2387.728 MPa and the minimum stress of the orifice flowmeter pipe wall is 994.8982 MPa. It can be seen that the location of the minimum stress of the orifice flowmeter is basically unchanged when the pressure load is 0.1 MPa and the temperature load is increased from 100 ℃ to 500 ℃, the value increases by 0.015864461MPa, and the location

of the maximum value is basically unchanged, but the value changes greatly, which increases by 2010.2189MPa.

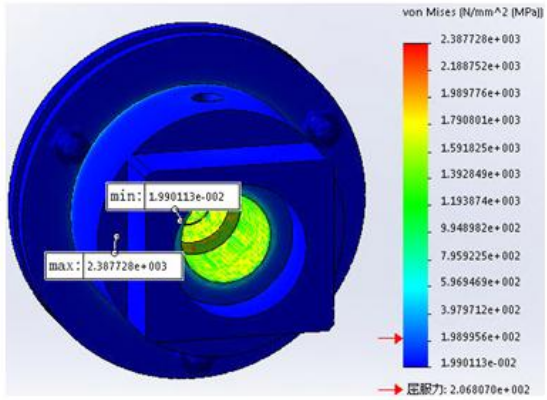


**(a) Main view**

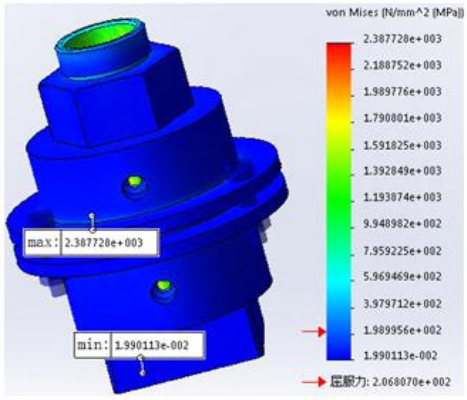


**(b) Top view**

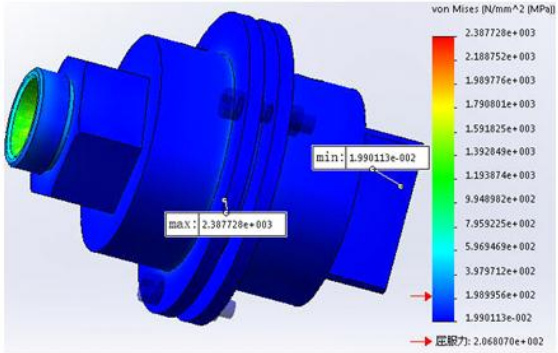


**(c) Left view**

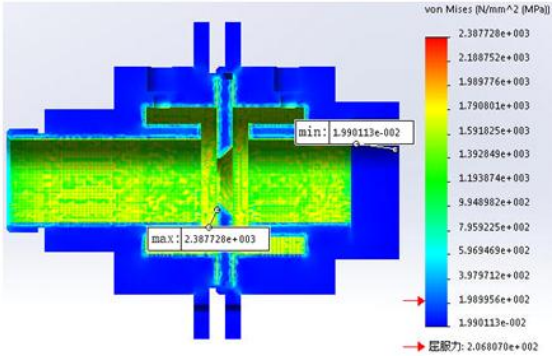


**(d) Cutaway view**

**Fig.7 Stress diagram (500 ℃, 0.1 MPa).**

By comparing the data of the stress change obtained above, it can be seen that when the pressure load is 0.1 MPa and remains unchanged, the stress change of the orifice flowmeter is positively correlated with the change of additional temperature load, and the maximum stress also increases with temperature load increasing, as shown in Fig. 8. The stress of the orifice flowmeter is concentrated at the middle groove or its inlet of the inner wall of the pipe, it can be concluded that the intensity of these two places should be increased in the future design.

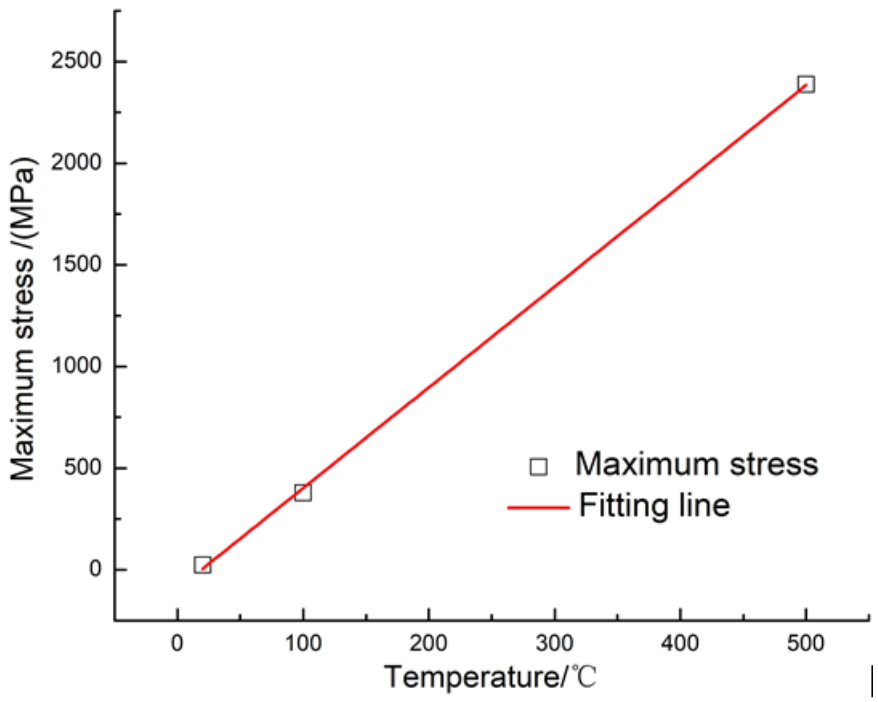


**Fig. 8: Diagram of relation between maximum stress and temperature at 0.1 MPa.**

**(2) Displacement analysis**

Firstly, the temperature load of 20 ℃ and the pressure load of 0.1 MPa was applied to the inner wall of the orifice flowmeter pipe, the results are shown in Fig. 9.

Fig. 9 (a) is the main view of displacement of the orifice flowmeter at 20 ℃ and 0.1 MPa and its detailed data; Fig. 9 (b) is the top view of displacement of the orifice flowmeter at 20 ℃ and 0.1 MPa and its detailed data; Fig. 9 (c) is the left view of displacement of the orifice flowmeter at 20 ℃ and 0.1 MPa and its detailed data; Fig. 9 (d) is the cutaway view of displacement of the orifice flowmeter at 20 ℃ and 0.1 MPa and its detailed data.

Fig. 9 (a) and Fig. 9 (d) show that the orifice flowmeter has the largest change of displacement at the middle wall of the inner wall of the pipeline, with a value of 0.0002845755mm, and the smallest change at the two fixed plates, which is close to 0 mm. Fig. 9 (a) shows that the maximum displacement at the outlet of the orifice flowmeter is 0.00007114387mm and the minimum displacement at the outlet of the orifice flowmeter is 0.00004742925mm; Fig. 9 (b) and Fig. 9 (c) show that the maximum displacement at the inlet of the orifice flowmeter is 0.0002371462 mm and the minimum displacement at the inlet of the orifice flowmeter is 0.00009485849 mm; Fig. 9 (d) shows that the maximum of the orifice flowmeter pipe wall is 0.0002845755mm and the minimum displacement of the

orifice flowmeter pipe wall is 0.00002371462mm.

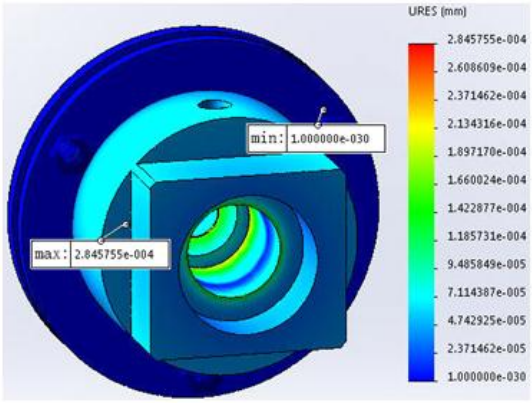


**(a) Main view**

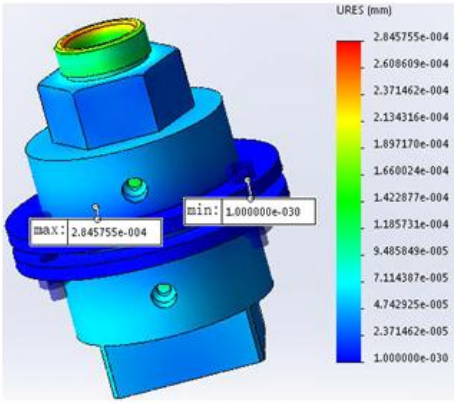


**(b) Top view**

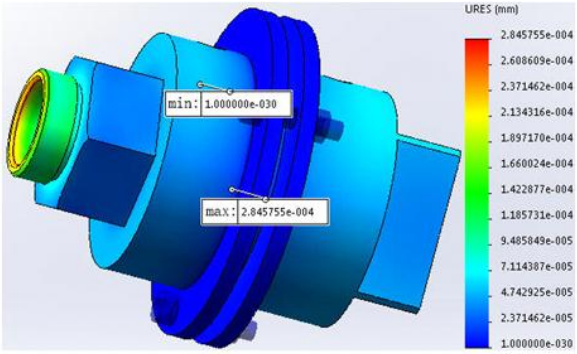


**(c) Left view**

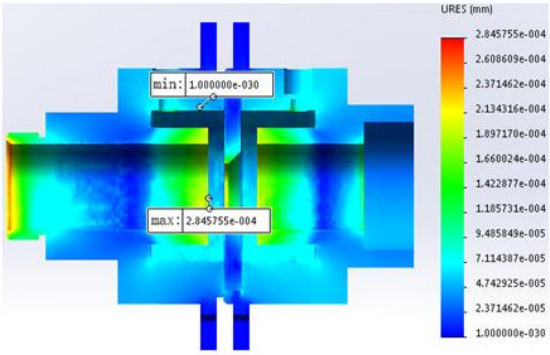


**(d) Cutaway view**

**Fig.9 Displacement diagram (20 ℃, 0.1 MPa).**

The pressure load applied on the orifice flowmeter is kept unchanged, and the temperature increases from 20 ℃ to 100 ℃, as shown in Fig. 10.

Fig. 10 (a) is the main view of displacement of the orifice flowmeter at 100 ℃ and 0.1 MPa and its detailed data; Fig. 10 (b) is the top view of displacement of the orifice flowmeter at 100 ℃ and 0.1 MPa and its detailed data; Fig. 10 (c) is the left view of displacement of the orifice flowmeter at 100 ℃ and 0.1 MPa and its detailed data; Fig. 10 (d) is the cutaway view of displacement of the orifice flowmeter at 100 ℃ and 0.1 MPa and its detailed data.

Fig. 10(a) and Fig. 10(d) show that the location of maximum displacement of the orifice flowmeter is changed from the middle wall of the inner wall of the pipeline to the inlet, and the value is 0.004558539 mm, which is 0.0042739635mm larger than that of the orifice flowmeter when the temperature load is 20 ℃ and the pressure load is 0.1 MPa, and the minimum value of displacement is obtained at the two fixed plates, which is close to 0. Fig.

10 (a) shows that the maximum displacement at the outlet of the orifice flowmeter is 0.001899391mm and the minimum displacement at the outlet of the orifice flowmeter is 0.0007597565mm; Fig. 10 (b) and Fig. 10 (c) show that the maximum displacement of outlet of the orifice flowmeter is 0.004558539 mm and the minimum of outlet of the orifice flowmeter is 0.001899391 mm; Fig. 10 (d) shows that the maximum displacement of the orifice flowmeter pipe wall is 0.003418904 mm and the minimum displacement of the orifice flowmeter pipe wall is 0.0003798782 mm. It can be seen that the location of maximum displacement of the orifice flowmeter is changed from the middle wall of the inner wall of the pipeline to inlet when the pressure load is 0.1 MPa and the temperature load is increased from 20 ℃ to 100 ℃, the value is increased by 0.0042739635mm, the location of minimum value is unchanged, and the value is still almost 0.

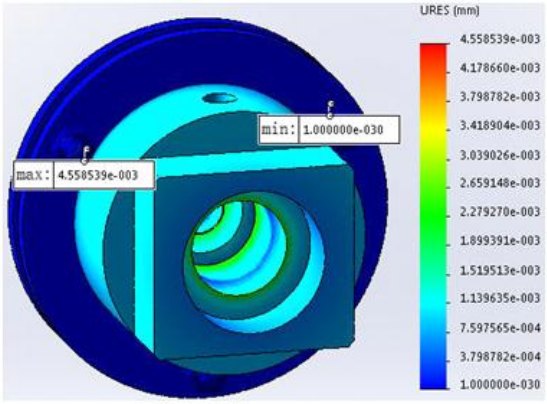


**(a) Main view**

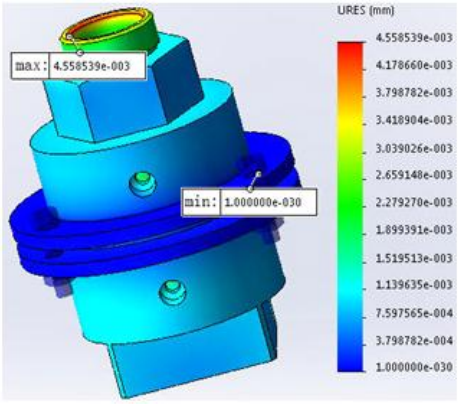


**(b) Top view**

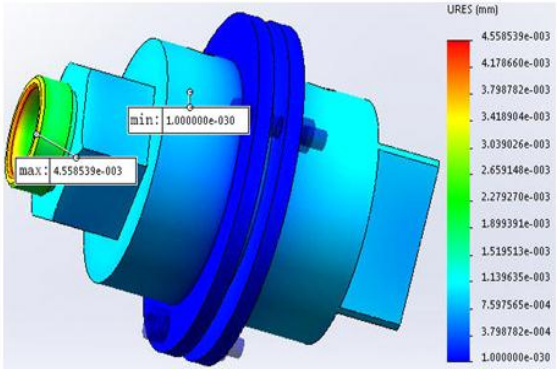


**(c) Left view**

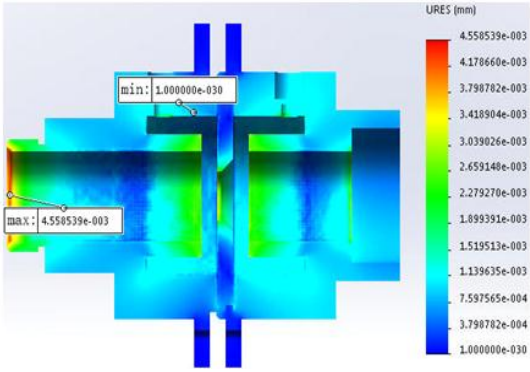


**(d) Cutaway view**

**Fig.10 Displacement diagram (100 ℃, 0.1 MPa).**

The pressure load applied to the orifice flowmeter is kept unchanged, and the temperature load is increased from 100 ℃ to 500 ℃, as shown in Fig. 11.

Fig. 11 (a) is the main view of displacement of the orifice flowmeter at 500 ℃ and 0.1 MPa

and its detailed data; Fig. 11 (b) is the top view of displacement of the orifice flowmeter at 500 ℃ and 0.1 MPa and its detailed data; Fig. 11 (c) is the left view of displacement of the orifice flowmeter at 500 ℃ and 0.1 MPa and its detailed data; Fig. 11 (d) is the cutaway view of displacement of the orifice flowmeter at 500 ℃ and 0.1 MPa and its detailed data.

Fig. 11 (a) and Fig. 11 (d) show that the displacement of the orifice flowmeter still reaches its maximum at its inlet, which is 0.02872968 mm, and it is 0.024171141mm larger than that of the orifice flowmeter when the temperature load is 100 ℃ and the pressure load is 0.1 MPa, the minimum value is obtained at the two fixed plates, and the value is close to 0. Fig. 11 (a) shows that the maximum displacement at the outlet of the orifice flowmeter is 0.01197070mm and the minimum displacement at the outlet of the orifice flowmeter is 0.002394140 mm; Fig. 11 (b) and Fig. 11 (c) show that the maximum displacement at the inlet of the orifice flowmeter is 0.02872968 mm and the minimum displacement at the inlet of the orifice flowmeter is 0.01197070 mm; Fig. 11 (d) shows that the maximum displacement of the orifice flowmeter pipe wall is 0.02154726 mm and the minimum displacement of the orifice flowmeter pipe wall is 0.002394140 mm. It can be seen that the location of maximum displacement of the orifice flowmeter remains unchanged when the pressure load is 0.1 MPa and the temperature load increases from 100 ℃ to 500 ℃, the value increases by 0.024171141mm, and the location of minimum displacement of the orifice flowmeter remains unchanged, and the value is still almost 0.

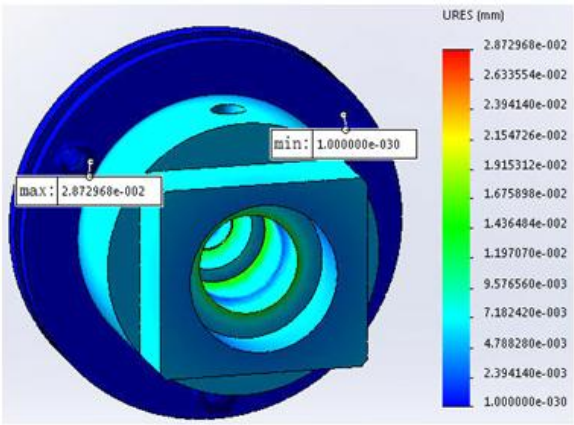


**(a) Main view**

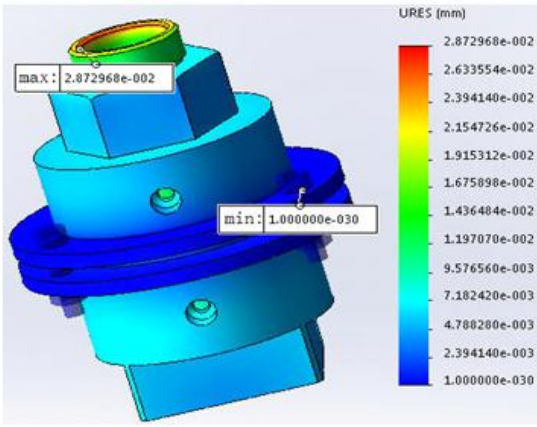


**(b) Top view**

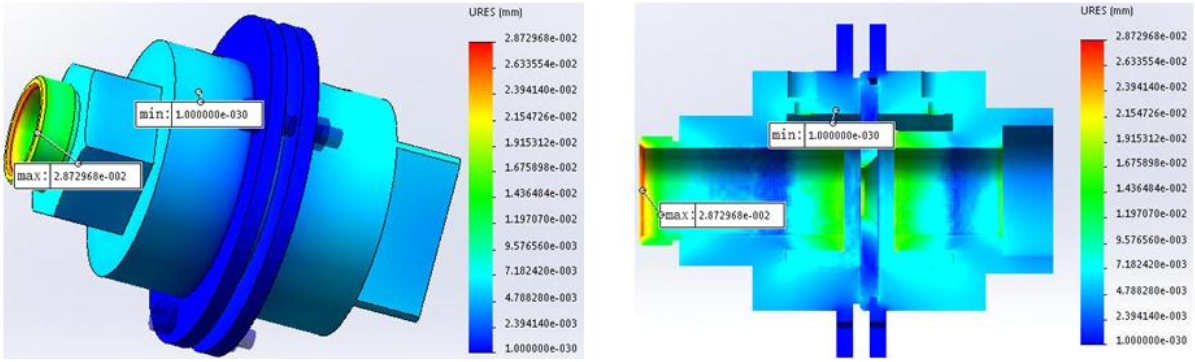


**(c) Left view** **(d) Cutaway view**

**Fig.11 Displacement diagram (500 ℃, 0.1 MPa).**

The results show that the displacement of the orifice flowmeter is positively correlated with the temperature load applied on the inner wall of the pipe when the pressure load is constant, the larger the applied load, the more obvious the change of displacement is, and the location of the maximum displacement of the orifice flowmeter is more obvious, as shown in Fig. 12. Besides, except for the displacement of the orifice flowmeter is most obvious at the middle wall of the inner wall of the pipeline at 20 ℃ and 0.1 MPa, in other cases, the displacement of the orifice flowmeter is always the most obvious at its inlet, while the displacement of the orifice flowmeter at the two fixed plates changes hardly.

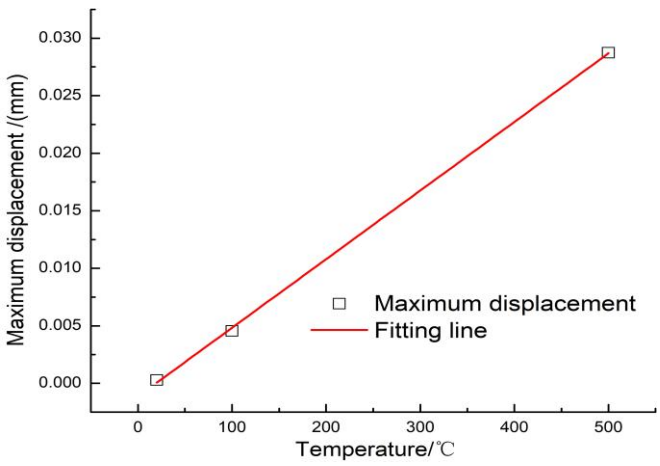


**Fig.12 Diagram of relation between maximum displacement and temperature at 0.1 MPa.**

**Strain analysis**

Similar to the stress analysis and displacement analysis, the temperature load of 20 ℃ and the pressure load of 0.1 MPa are applied to the inner wall of the orifice flowmeter pipe, and the results are shown in Fig. 13.

Fig. 13 (a) is the main view of strain of the orifice flowmeter at 20 ℃ and 0.1 MPa and its detailed data; Fig. 13 (b) is the top view of strain of the orifice flowmeter at 20 ℃ and 0.1 MPa and its detailed data; Fig. 13 (c) is the left view of strain of the orifice flowmeter at 20 ℃ and 0.1 MPa and its detailed data; Fig. 13 (d) is the cutaway view of strain of the orifice flowmeter at 20 ℃ and 0.1 MPa and its detailed data.

Fig. 13 (a) and Fig. 13 (d) show that the orifice flowmeter has the maximum strain in its shell, with a value of 0.00007247418, the strain at its outlet is the smallest, with a value of 0.000000001211225. Fig. 13 (a) shows that the maximum strain at the outlet of the orifice flowmeter is 0.000012080004 and the minimum strain at the outlet of the orifice flowmeter is 0.000000001211225. Fig. 13 (b) and Fig. 13 (c) show that the maximum strain at the inlet of the orifice flowmeter is 0.00003623770 and the minimum strain at the inlet of the orifice flowmeter is 0.000006040626. Fig. 13 (d) shows that the maximum strain of the orifice flowmeter pipe wall is 0.00006039536 and the minimum strain of the orifice flowmeter pipe wall is 0.00003019828.

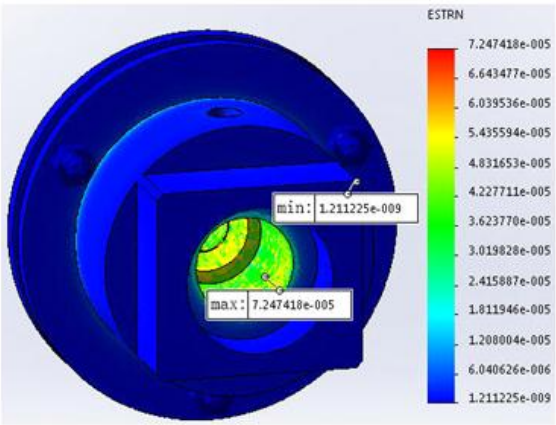


**(a) Main view**

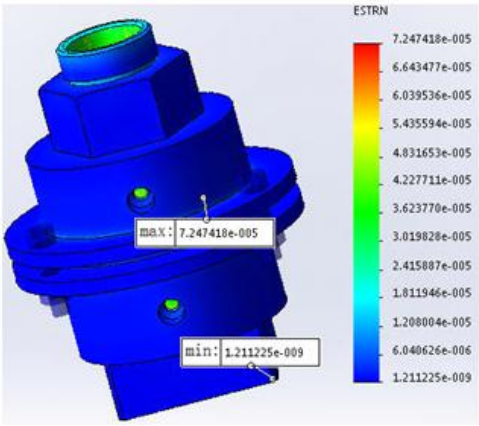


**(b) Top view**

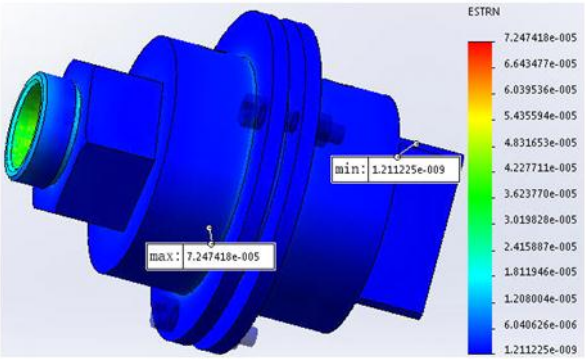


**(c) Left view**

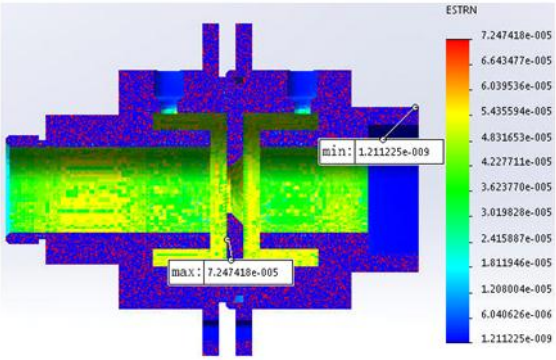


**(d) Cutaway view**

**Fig.13 Strain diagram (20 ℃, 0.1 MPa).**

The pressure load applied on the orifice flowmeter is kept unchanged, and the temperature load is increased from 20 ℃ to 100 ℃, as shown in Fig. 14.

Fig. 14 (a) is the main view of strain of the orifice flowmeter at 100 ℃ and 0.1 MPa and its detailed data; Fig. 14 (b) is the top view of strain of the orifice flowmeter at 100 ℃ and 0.1 MPa and its detailed data; Fig. 14 (c) is the left view of strain of the orifice flowmeter at 100 ℃ and 0.1 MPa and its detailed data; Fig. 14 (d) is the cutaway view of strain of the orifice flowmeter at 100 ℃ and 0.1 MPa and its detailed data.

Fig. 14 (a) and Fig. 14 (d) show that the strain of the orifice flowmeter reaches its maximum value in the shell, which is 0.001111107,and compared with the orifice flowmeter when the temperature load is 20 ℃ and the pressure load is 0.1 MPa, it increases by 0.00103863282, and the strain of the orifice flowmeter obtain the minimum value at its outlet which is 0.00000003563116, which is 0.000000034419935 larger than that of the orifice flowmeter when the temperature load is 20 ℃ and the pressure load is 0.1MPa. Fig. 14 (a) shows that the maximum strain at the outlet of the orifice flowmeter is 0.0001852142 and the minimum strain at the outlet of the orifice flowmeter is 0.00000003563116; Fig. 14 (b) and Fig. (c) show that the maximum strain at the inlet of the orifice flowmeter is 0.0006481605 and the minimum strain at the inlet of the orifice flowmeter is 0.0002778034; Fig. 14 (d) shows that the maximum value of the orifice flowmeter pipe wall is 0.0009259283 and the minimum value of the orifice flowmeter pipe wall is 0.00055712. It can be seen that the maximum strain of the orifice flowmeter is obtained in the shell when the pressure load is 0.1 MPa and the temperature load is increased from 20 ℃ to 100 ℃,the value is increased by 0.00103863282, the location of minimum strain is unchanged, and the value is increased by 0.00000003563116.

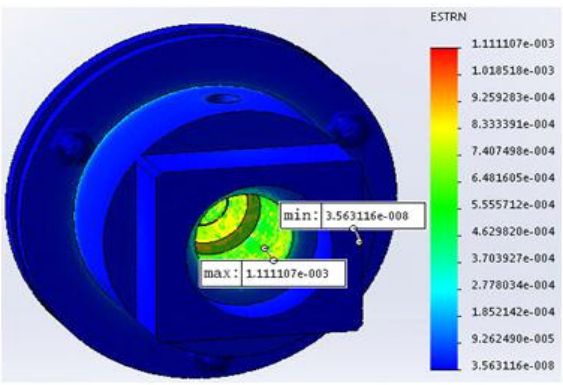


**(a) Main view**

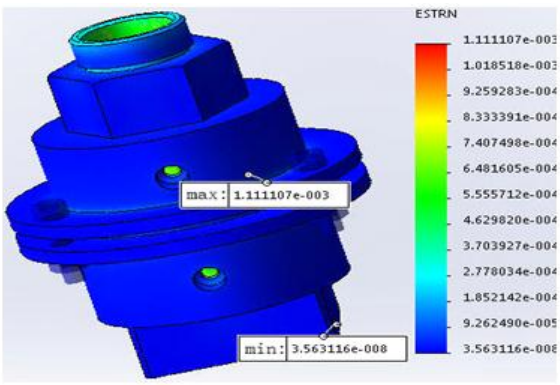


**(b) Top view**

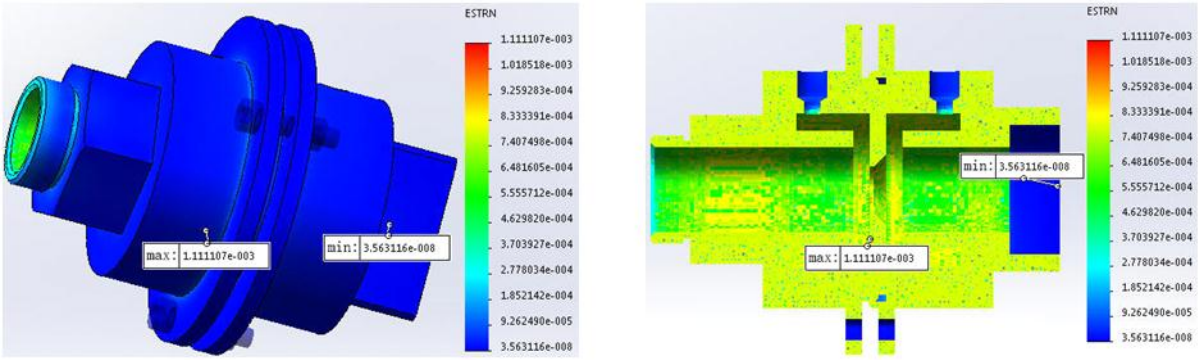


**(c) Left view** **(d) Cutaway view**

**Fig.14 Strain diagram (100 ℃, 0.1 MPa).**

Keep the pressure load applied on the orifice flowmeter unchanged, and increase the temperature load from 100 ℃ to 500 ℃ as shown in Fig. 15.

Fig. 15 (a) is the main view of strain of the orifice flowmeter at 500 ℃ and 0.1 MPa and its detailed data; Fig. 15 (b) is the top view of strain of the orifice flowmeter at 500 ℃ and 0.1 MPa and its detailed data; Fig. 15 (c) is the left view of strain of the orifice flowmeter at 500 ℃ and 0.1 MPa and its detailed data; Fig. 15 (d) is the cutaway view of strain of the orifice flowmeter at 500 ℃ and 0.1 MPa and its detailed data.

Fig. 15 (a) and Fig. 15 (d) show that the strain of the orifice flowmeter in its shell reaches a maximum value of 0.007029017, and it is 0.00591791 larger than that of the orifice flowmeter when the temperature load is 100 ℃ and the pressure load is 0.1 MPa. The strain at the outlet of the orifice flowmeter reaches a minimum value which is 0.0000002955327, it is 0.00000025990154 larger than that of the orifice flowmeter when the temperature load is 100 ℃ and the pressure load is 0.1MPa. Fig. 15 (a) shows that the maximum strain at the outlet of the orifice flowmeter is 0.001171749 and the minimum strain at the outlet of the orifice flowmeter is 0.0000002955327; Fig. 15 (b) and Fig. 15 (c) show that the maximum strain at the inlet of the orifice flowmeter is 0.004100383 and the minimum strain at the inlet of the orifice flowmeter is 0.0005860223. Fig. 15 (d) shows that the maximum strain at the inner wall of the orifice flowmeter pipe is 0.005857563, and the minimum at the inner wall of the orifice flowmeter pipe is 0.002928929. It can be seen that the maximum strain of the orifice flowmeter can be obtained in the shell when the pressure load is 0.1 MPa and the temperature load is increased from 100 ℃ to 500 ℃, the value is increased by 0.00591791, the location of minimum strain is unchanged, and the value is increased by 0.00000025990154.

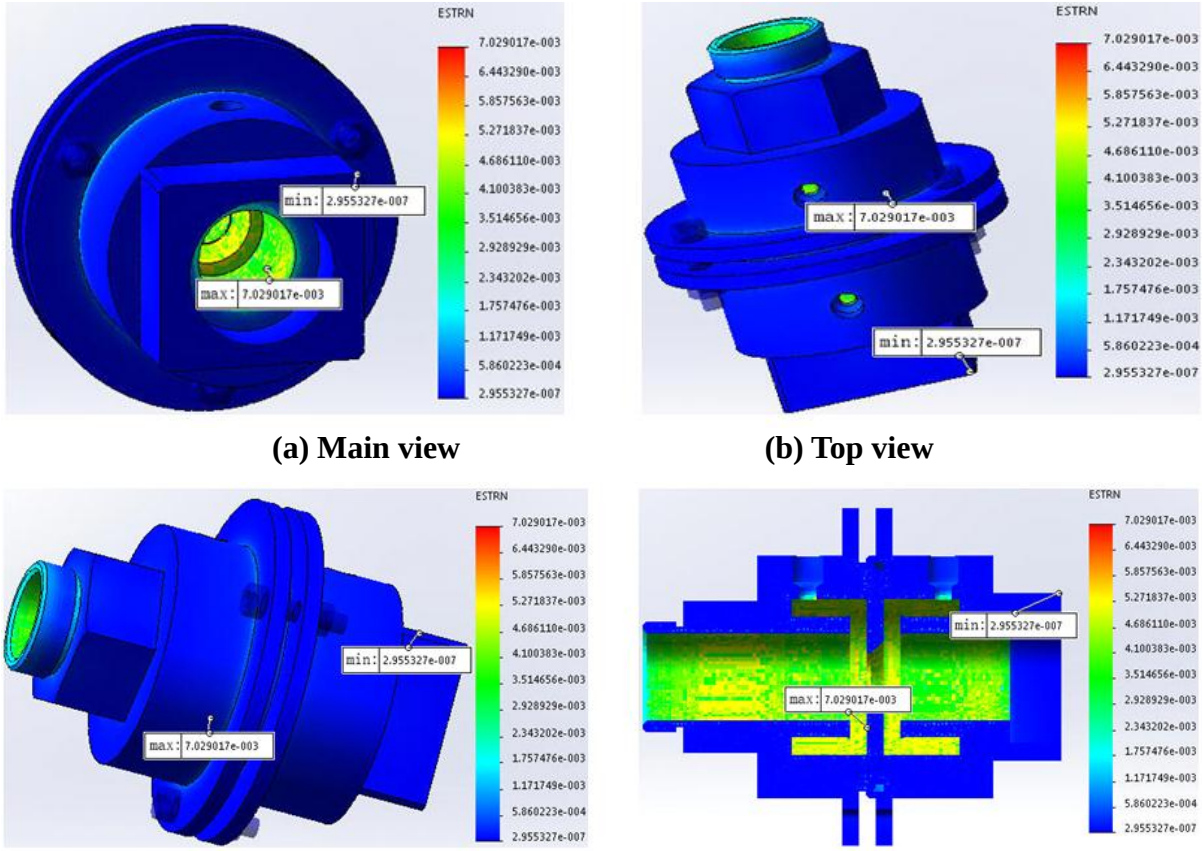


**(a) Main view** **(b) Top view**

**(c) Left view** **(d) Cutaway view**

**Fig.15 Strain diagram (500 ℃, 0.1 MPa).**

Through the analysis of the above strain results, it can be seen that when the pressure load is 0.1 MPa and remains unchanged, the strain of the orifice flowmeter increases with the increase of additional temperature load, and the maximum strain also increases with it, there is a linear correlation between the two, as shown in Fig. 16. The maximum strain of the orifice flowmeter is distributed in the shell, and the minimum strain is at the outlet of the orifice flowmeter.

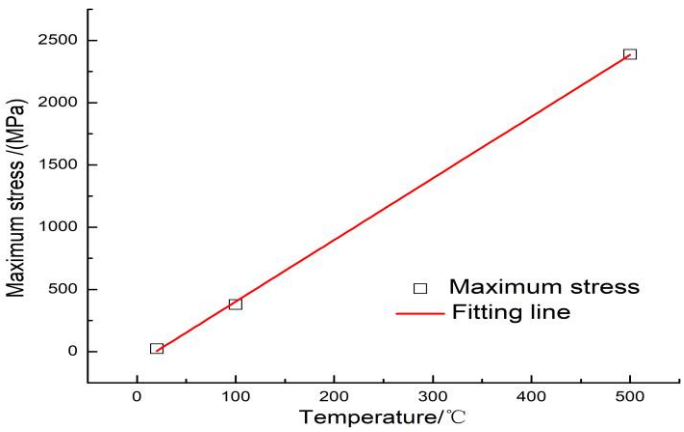


**Fig.16 Diagram of relation between maximum strain and temperature at 0.1 MPa.**

## 3 CONCLUSION

In this paper, the three-dimensional model of the orifice flowmeter is analyzed by using simulation software, the stress, strain and displacement of the three-dimensional model are observed under the given conditions, it is found that when a pressure load of 0.1 MPa and the different temperature load are applied to the inner wall of the orifice flowmeter pipe, the maximum stress on the orifice flowmeter occurs at the middle groove of the inner wall of the pipe or its inlet, the displacement of the middle wall or the outlet of the inner wall of the pipe changes most obviously, and the maximum strain of the orifice flowmeter occurs inside the shell. The maximum stress, the maximum displacement and the maximum strain of the orifice flowmeter are linearly correlated with temperature load, but they are affected little by temperature load. In practical application, the corresponding location can be strengthened to enhance the stability of the orifice flowmeter.

## ACKNOWLEDGEMENTS

The work was supported by Zhejiang Provincial Market Supervision and Administration Project (No. 20190131) and Quzhou Science and Technology Project (No. 2018K05).

## REFERENCE

1. Gao Songwei, Goudan. Application of hydrodynamic software in orifice plate measurement[J]. Journal of Shenyang University of Technology, 2009; 31(01): 84-88.
2. Sun Huaiqing. Development and Prospect of Orifice Flowmeter in China [J]. Automation Instrument, 2007; (S1): 30-32.
3. Fang Shuping. Brief discussion on the use and measurement error of orifice plate flowmeter [J]. Chemical Engineering and Equipment, 2010; (07): 75-76.
4. Yang Guolai, Li Mingxue. Simulation of flow field inside orifice flowmeter [J]. Gansu Science Journal, 2015; 27(06): 79-81, 106.
5. Gao Jingwei, Xiao Jingguang. Application and daily management of standard orifice flowmeter [J]. Equipment management and maintenance, 2015; (S2): 309-311.
6. Pang Haiming. The method of improving the measuring accuracy of orifice flowmeter[J]. Chemical automation and instrument, 2018; 45(12): 925-928.
7. Shi Xiaojun. Error analysis and correction of orifice flowmeter[J]. Automation Instrument, 2010; 31(2): 72-73.
8. Zheng Boren. Measurement error of orifice flowmeter and its causes and solutions[J]. Chemical Design Communication, 2017; 43(12): 112.

9. Zhou Chenxuan. Brief discussion on the factors affecting the orifice plate flowmeter to measure gas flow [J]. Science and Technology Wind, 2017; (11): 220.
10. Wen Shiming. Application analysis of three-dimensional modeling software Solidworks in scientific research and innovation[J]. Modern industrial economy and informatization, 2019; 9(04): 12-13, 26.
11. Han Liguang, Liu Fang. Finite element fatigue analysis of support shaft based on Solidworks Simulation[J]. World Manufacturing Technology and Equipment Market, 2018; (3): 70-72.